# REPUBLIC OF THE MARSHALL ISLANDS

Maritime Administrator

## NAVIG8 AXINITE CASUALTY INVESTIGATION REPORT

Third Engineer Fatal Injury

English Channel | 29 July 2020

Official Number: 5778

IMO Number: 9719771

**Published by: Republic of the Marshall Islands Maritime Administrator 25 March 2021**

## DISCLAIMER

In accordance with national and international requirements, the Republic of the Marshall Islands Maritime Administrator (the "Administrator") conducts marine safety investigations of marine casualties and incidents to promote the safety of life and property at sea and to promote the prevention of pollution. Marine safety investigations conducted by the Administrator do not seek to apportion blame or determine liability. While every effort has been made to ensure the accuracy of the information contained in this Report, the Administrator and its representatives, agents, employees, or affiliates accept no liability for any findings or determinations contained herein, or for any error or omission, alleged to be contained herein.

Extracts may be published without specific permission providing that the source is duly acknowledged; otherwise, please obtain permission from the Administrator prior to reproduction of the Report.

## AUTHORITY

An investigation, under the authority of the Republic of the Marshall Islands laws and regulations, including all international instruments to which the Republic of the Marshall Islands is a Party, was conducted to determine the cause of the casualty.

*Maritime Administrator*

# TABLE OF CONTENTS


# PART 1: EXECUTIVE SUMMARY

On 29 July 2020, the Republic of the Marshall Islands-registered Oil/Chemical Tanker (type 2) NAVIG8 AXINITE, managed by Suntech Ship Management PTE Ltd. (the "Company"), was underway on a ballast voyage from Rotterdam, Kingdom of the Netherlands to Pivdennyi, Ukraine.

While cleaning Cargo Oil Tank (COT) No. 3, port and starboard, it was observed that the wash water was not being heated to the required 75 degrees (°) Celsius (C). Troubleshooting efforts by the crew were not successful in increasing the wash water temperature. The Chief Engineer (C/E) then decided that further troubleshooting would wait until after completing the required fuel changeover upon departing the North Sea Emissions Control Area (ECA).

At about 1800,[1] the Third Engineer (3/E) left the Engine Room for dinner. He informed the Second Engineer (2/E) that he would also have a look on deck before returning to the Engine Room. A short time later, a loud bang was heard by crewmembers working near the port cargo manifold. They saw a large quantity of steam coming from the condensate return line observation tank. As they got closer, they discovered the sight glass for the observation tank had failed. They also found the 3/E lying on the deck about 10 meters (m) to starboard of the observation tank. First aid measures were immediately started; however, the 3/E succumbed to his injuries and was pronounced deceased at 2100 on 29 July 2020.

The marine safety investigation conducted by the Republic of the Marshall Islands Maritime Administrator (the "Administrator") identified the below factors.

1 Unless otherwise stated, all times are ship's local time (UTC +2).

1. Causal factors which may have contributed to this very serious marine casualty include:
   (a) failure of the pneumatically controlled valve (TR109), which prevented the proper condensate level control in the tank cleaning heater, which likely allowed steam to pass into the condensate system;
   (b) modification to the observation tank vent reducing the opening to about 5 millimeters (mm), therefore limiting its pressure release capability;
   (c) the observation tank drain valve (TR101) being closed while the steam system was operating at 6 bar, which significantly increased the pressure in the observation tank;
   (d) catastrophic failure of the sight glass on the observation tank from over pressurization; and
   (e) lack of a warning sign or other marking near the TR101 to warn against closure while the steam system is operational.
2. Additional casual factors identified by the Administrator that may have contributed to this very serious marine casualty include:
   (a) use of a standing risk assessment that did not fully capture all of the risks that could reasonably be expected to be encountered;
   (b) lack of requirements in the Company's preventive maintenance system (PMS) specific to the flame arresting screen for the observation tank; and
   (c) failure to verify the proper deck steam system alignment when the bypass line valves were left open following warm-up.

## PART 2: FINDINGS OF FACT

The following Findings of Fact are based on the information obtained during the Administrator's marine safety investigation.

1. Ship particulars: *see* chart to right.
2. NAVIG8 AXINITE is an Oil/Chemical Tanker (type 2)[2] with 14 COTs and two Slop tanks[3] *(see Figure 1)*.

### SHIP PARTICULARS

**Ship Name**
NAVIG8 AXINITE

**Registered Owner**
Sea 12 Leasing Co. Ltd.

**ISM Ship Management**
Suntech Ship Management PTE Ltd.

**Flag State**
Republic of the Marshall Islands

| IMO No. | Official No. | Call Sign |
|---|---|---|
| 9719771 | 5778 | V7GX4 |

| Year of Build | Gross Tonnage |
|---|---|
| 2015 | 23,676 |

| Net Tonnage | Deadweight Tonnage |
|---|---|
| 9,905 | 37,608 |

**Length x Breadth x Depth**
177.4 x 27.4 x 17.2 meters

**Ship Type 2**
Oil/Chemical Tanker (Type 2 2)

**Document of Compliance Recognized Organization**
American Bureau of Shipping

**Safety Management Certificate Recognized Organization**
Korean Register of Shipping

**Classification Society**
Korean Register of Shipping

**Persons on Board**
21

2 As defined by the International Code for the Construction and Equipment of Ships Carrying Dangerous Chemicals (IBC Code), a type 2 Oil/Chemical Tanker is intended to transport IBC Code Chapter 17 products with very severe environmental and safety hazards which require maximum preventive measures to preclude an escape of such cargo.

3 The International Convention for the Prevention of Pollution from Ships (MARPOL) Annex II does not require chemical tankers to have dedicated Slop tanks. Additionally, MARPOL Annex II allows cargo tanks to be used as Slop tanks.

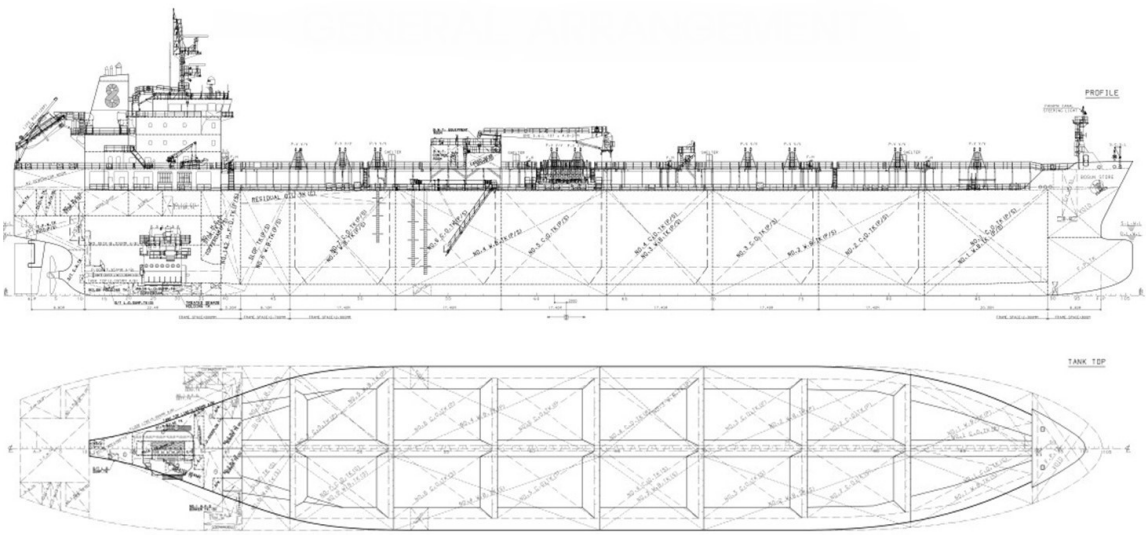


*Figure 1: General arrangement of NAVIG8 AXINITE.*

3. NAVIG8 AXINITE has a tank cleaning system that uses a combination of fixed and portable machines. Wash water for the tank cleaning system can be heated by the tank cleaning heater.

***Deck Steam System***

4. Steam is generated by the boiler in the Engine Room and distributed on deck by the steam supply line. This line runs from the Engine Room forward to COT No. 1, port and starboard. Steam can be supplied to the heating coils in each tank and the tank cleaning heater.

5. The deck steam system also has a condensate return line. This collects condensate from the steam system and carries it aft for reuse as boiler feed water.

6. An observation tank for the condensate return line is located near the port Slop tank. Condensate runs through this before returning to the Engine Room. The observation tank has a 25 mm vent pipe and an observation window covered with thermal resistant glass.

7. The observation tank's outlet has a manual non-return globe valve before the condensate line enters the Engine Room *(see Figure 2)*.

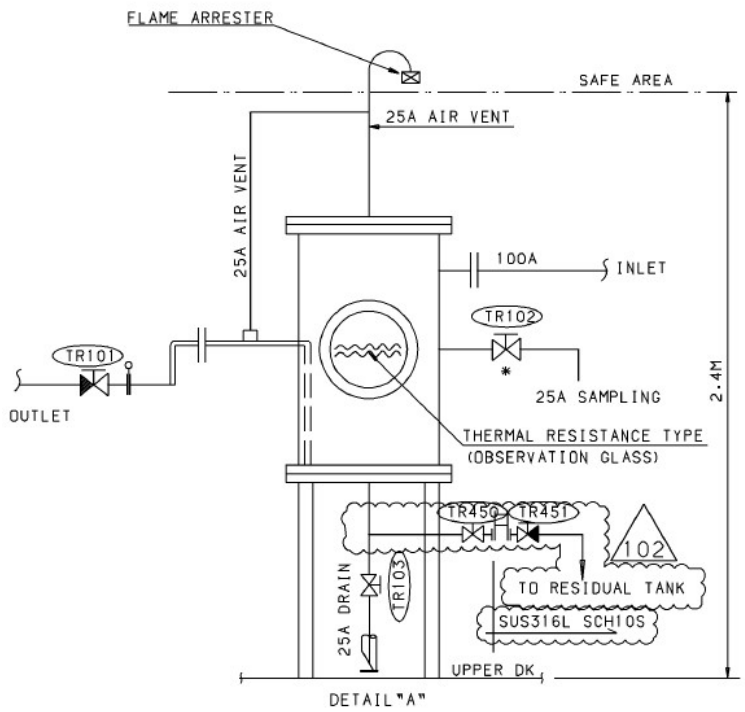


*Figure 2: Diagram of observation tank on the condensate return line.*

8. The tank cleaning heater is a heat exchanger located in a cargo gear locker on deck *(see Figure 3)*.

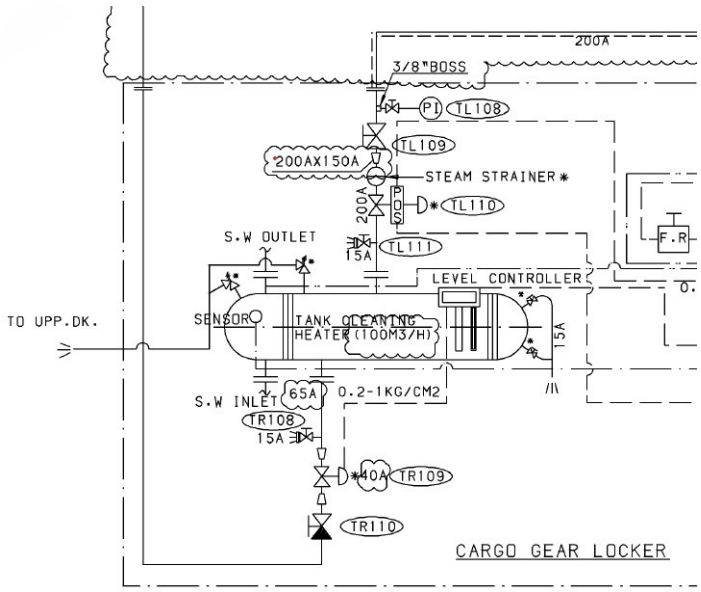


*Figure 3: Diagram of the tank cleaning heater.*

9. The steam supply and condensate return lines are directly connected through two bypass lines. One bypass is located over COT No. 1, port and starboard, while the other is over the Slop port and starboard tanks. The bypass lines have manual globe valves where they connect to the steam supply and condensate return lines. Steam traps[4] are fitted between the valves of both bypass lines *(see Figure 4)*.

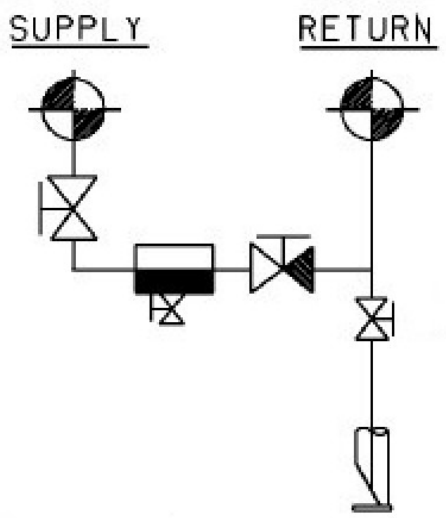


*Figure 4: Diagram of the bypass lines between the steam supply and condensate return lines.*

***Previous Cargo***

10. NAVIG8 AXINITE arrived at Rotterdam, Kingdom of the Netherlands on 22 July 2020, where the full cargo of sunflower seed oil was discharged. The ship was then fixed to load another cargo of sunflower seed oil at Pivdenny, Ukraine. Cleaning of all tanks was required before loading the next cargo.

***Tank Cleaning Plan***

11. The Chief Officer (C/O) finalized the tank cleaning plan on 27 July 2020. There were nine stages to the cleaning operation *(see Figure 5)*.



4 A steam trap is an automatic valve which allows condensate (water) to be discharged without steam passing through the valve.

| Stage | Description |
|---|---|
| 1 | Ambient Salt Water Wash (30°C) – 1 Hour |
| 2 | Warm Salt Water Wash (40-50°C) – 1 Hour |
| 3 | Hot Salt Water Wash (75°C) – 2 Hours |
| 4 | Chemical Re-circulation – 3 Hours<br>(3% Alkaline Potassium and 0.5% "Neutral HCF" in 60°C Fresh Water) |
| 5 | Hot Salt Water Rinse (75°C) – 3 Hours |
| 6 | Hot Fresh Water Rinse – 20 Minutes |
| 7 | Line Steaming / Line Blow |
| 8 | Ventilation |
| 9 | Mop Dry |

*Figure 5: Stages of the tank cleaning plan.*

12. The C/O conducted a Toolbox Talk[5] before beginning the tank cleaning operation. The tank cleaning plan and a standing risk assessment for tank cleaning was reviewed with the Master, C/E, Second Officer (2/O), Third Officer (3/O), Junior Officer, Bosun, Pumpman, Able Seafarer Deck (ASD) 1, ASD2, ASD3, Ordinary Seafarer (OS) 1, and OS2.

13. This risk assessment was last updated on 6 May 2020. It identified safety risks associated with the potentially hazardous tank atmosphere and the environmental risks associated with the failure to properly remove residual cargo from the tank.

***Incident***

14. Stage 1 of the tank cleaning plan was started on 27 July 2020 after discharging sunflower seed oil and was completed for all tanks before departing Rotterdam.

15. On 28 July 2020, NAVIG8 AXINITE departed Rotterdam on a ballast voyage to Pivdenny, Ukraine.

16. To warm-up the system,[6] the Pumpman aligned the deck steam valves under the C/O's direction. The valves for both bypass lines were opened to allow condensate to flow to the return line.

17. On the morning of 29 July 2020, the steam system pressure was increased to 6 bar and tank cleaning operations resumed. Stages 2 and 3 were completed for COT Nos. 1 and 2, port and starboard, during the morning of 29 July 2020. The wash water temperature was reported to be 75°C.

5 A Toolbox Talk is a meeting conducted by the person in charge of the work to ensure that all involved workers (crewmembers or contractors) understand and are aware of the hazards and their associated control measures.

6 Warm-up is the process of slowly introducing steam to a system to gradually warm the piping and associated appliances. Bypass lines fitted with steam traps allow for the condensate return without needing to use steam appliances (such as tank heating coils, tank cleaning heaters, etc.).

18. Next, Stage 2 was completed on COT No. 3, port and starboard. At about 1200 on 29 July 2020, it was noted that the wash water was unable to reach the required 75°C when Stage 3 cleaning of COT No. 3, port and starboard, was started. The wash water was reported to only be heating to 65°C.

19. The C/O, C/E, 2/E, and 3/E went on deck to troubleshoot the system. They first saw steam releasing from the vent on the condensate return line observation tank *(see Figure 6)*.


*Figure 6: Condensate return line observation tank vent.*

20. Further troubleshooting identified that TR109, which regulated the condensate level in the tank cleaning heater, was not working properly.[7] The manual valve on the condensate return line (TR110), immediately downstream of the pneumatic valve was then partially closed to try to raise the condensate levels in the tank cleaning heater. This was an attempt to create a more effective heat exchange *(see Figure 7)*.

7 The cause of TR109's failure could not be determined. The valve was subsequently replaced with a new valve and was operating properly.

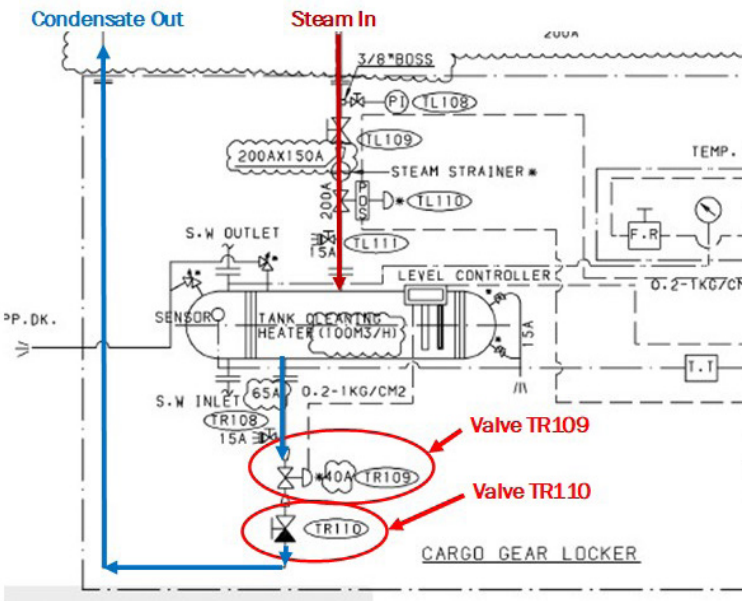


*Figure 7: Tank cleaning heater diagram showing the steam and condensate flows and location of valves TR109 and TR110.*

21. Partially closing TR110 did not increase the wash water temperature.

22. Fuel changeover from marine gas oil to very low sulfur fuel oil was planned to begin at 1900, as the ship was leaving the North Sea ECA. The C/E decided that further troubleshooting of the tank cleaning heater would wait until after completing the fuel changeover. The C/E, 2/E, and 3/E then went to the Engine Room.

23. At about 1800, the 3/E told the 2/E that he was going for dinner and that he would take a look on deck before returning to the Engine Room.

24. At about 1817, a loud bang was heard on deck. The Bosun, ASD1, and OS1 were working near the port side cargo manifold when they heard the noise, which appeared to come from aft near the Accommodation. They also saw large quantities of steam being released from above the Slop tanks.

25. The C/O was working in the Cargo Control Room when the bang occurred. He looked out on deck through the windows and saw large quantities of steam. He immediately notified the Duty Engineer to stop the steam to the deck and then stopped all cargo pumps.

26. The Bosun went aft to investigate the cause of the noise and steam. He saw steam coming from the observation tank and found a portable very high frequency (VHF) radio on the deck nearby. The Bosun found the 3/E laying on the deck near the Slop starboard Butterworth cover and immediately informed the Bridge by radio. The 3/E was about 10 m to starboard of the observation tank.

27. At about 1818, the general emergency alarm was raised and an announcement was made over the ship's public address system. All crewmembers mustered and proceeded to the Slop starboard. The C/O found the 3/E had a pulse, was breathing, but was unable to speak.

28. At 1821, the 3/E arrived in the ship's Hospital on a stretcher where he had a pulse but with faint breathing. Medical oxygen was administered while he was further examined. The 3/E had multiple injuries to his head, upper body, and arms.

29. At about 1827, Maritime Rescue Coordination Center (MRCC) Guernsey was notified by satellite phone. The Master requested urgent medical evacuation of the 3/E.

30. The ship then altered course towards Lizard Point, Cornwall, United Kingdom (UK).

31. At 1835, the 3/E had no pulse when checked by the C/O.

32. The Master was advised at about 1850 by MRCC Guernsey to contact MRCC Corsen. MRCC Corsen directed the ship to divert directly towards the French coast.

33. At 1917, MRCC Corsen informed the Master that a helicopter would arrive in about 45 minutes. The helicopter arrived at NAVIG8 AXINITE's location at about 2009 and lowered a medical team to the ship.

34. The medical team went to the ship's Hospital and began lifesaving efforts. Despite the crewmembers and medical team's efforts, the 3/E was pronounced deceased by the medical team at 2100 on 29 July 2020.

35. On 5 August 2020, a certificate of death was issued by the Acting Senior Coroner of Cornwall and Isles of Scilly. The 3/E's injuries to his head, upper body, and arms were consistent with being struck by pieces of glass.[8]

***Incident Location***

36. Following the incident, a detailed examination of the surrounding area was conducted. It was found that a large quantity of steam was coming from the observation tank because the sight glass had shattered *(see Figure 8)*.


*Figure 8: Photo of the observation tank and observation port where glass failed. The steel cover was installed after the incident occurred.*

8 Due to restrictions implemented in response to the Coronavirus disease (COVID-19) pandemic, authorities in the French Republic did not allow disembarkation of the deceased 3/E. The ship subsequently diverted to the UK where the deceased 3/E was taken ashore.

37. The TR101 on the drain line from the observation tank was fully closed when examined after the incident *(see Figure 9)*. The manufacturer's instruction manual states this valve must always remain open when the system is in use. No warnings or other markings were present near the valve to indicate that it must remain open.

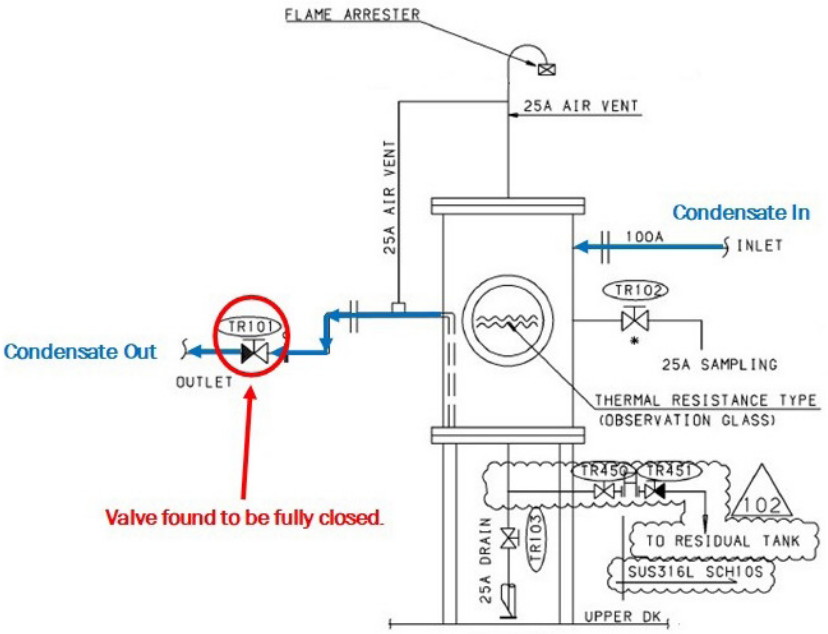


*Figure 9: Condensate return line observation tank diagram showing flow and the valve which was found closed.*

38. The vent for the observation tank was removed following the incident. When disassembled, a metal blank was found fitted in place of the flame arresting screen. This blank had about a 5 mm hole in the center *(see Figure 10)*. The Administrator could not determine when this blank had been fitted. Neither the crewmembers nor the Company knew about the blank's existence. One of the 13 other similar type 2 ships in the Company's managed fleet had a similar blank installed on the vent.[9]

9 All of the similar ships were constructed at the same shipyard. However, it could not be established when the blanks were fitted on either ship.

*Figure 10: Photos of the condensate return line observation tank vent.*

39. Both valves on the forward bypass line between the steam and condensate lines were found open following the incident. The steam trap fitted on the forward bypass line was tested following the incident and found to be functioning properly.

40. Following the incident, TR110 was found still partially closed.

***Safety Management System (SMS)***

41. As required by the International Maritime Organization's (IMO's) International Management Code for the Safe Operation of Ships and for Pollution Prevention (International Safety Management (ISM) Code), the Company's SMS provided procedures for shipboard tasks such as cargo tank cleaning. Additionally, the Company's SMS included requirements for using personal protective equipment (PPE), crewmember training, hazard identification, and hazard mitigation.

42. The SMS required conducting a Toolbox Talk before any work begins. The Company's SMS did not require documenting Toolbox Talks in writing. The C/O held a Toolbox Talk with the involved crewmembers before starting the tank cleaning process. This included the C/E, but not the 2/E or 3/E.

43. The SMS also required conducting a pre-task hazard identification before beginning work. The C/O reviewed a standing risk assessment during the Toolbox Talk held before tank cleaning operations. This assessment was last updated on 6 May 2020 and was subsequently approved by the Company on the

same date. The risk assessment was valid for six months and identified hazards associated with tank cleaning, including the possible presence of a hazardous atmosphere in the tank, risk of injury due to the failure to wear the required PPE, and the risk of environmental damage if the tank cleaning is not properly completed.

44. The Company's SMS also details the PPE required for various shipboard operations. It requires coveralls, safety shoes, a safety helmet, and appropriate eye protection be worn when working on deck. The 3/E was reported to have been wearing the required PPE.

45. Additionally, the Company's SMS requires that crewmembers complete initial shipboard familiarization training on joining the ship. This included familiarization with the Company's SMS requirements and the use of PPE. Records on board indicate that the 3/E completed this training on 10 July 2020.

***PMS***

46. The Company's SMS also included a detailed PMS. The PMS did have inspection and maintenance requirements for the deck steam system. The flame screen for the observation tank vent was not specifically mentioned by the PMS. Additionally, the PMS did not specifically address the functions of TR101, TR109, and TR110.

47. It is reported that the operation of TR109 and TR110 were verified during steam system alignment before warm-up. It was also reported that the observation tank vent was not inspected or verified prior to warm-up.

48. TR109 functioned properly during warm-up and washing of COT Nos. 1 and 2, port and starboard.

49. It is reported that TR101 was kept open and only closed if deck steam system maintenance was required.

***NAVIG8 AXINITE Crew***

50. NAVIG8 AXINITE had a complement of 21 crewmembers, five more than required by the Minimum Safe Manning Certificate issued by the Administrator.

51. All involved seafarers held the appropriate Republic of the Marshall Islands-issued seafarer documentation for their positions.

52. Experience of relevant crewmembers:

| RANK | TIME ON BOARD NAVIG8 AXINITE | TIME IN RANK | TIME WITH COMPANY | TOTAL TIME AT SEA |
|---|---|---|---|---|
| Master | 52 days | 0.7 years | 4.7 years | 16 years |
| C/O | 52 days | 3.1 years | 3.3 years | 15 years |
| 2/O | 20 days | 1.8 years | 5 years | 11 years |
| 3/O | 183 days | 0.5 years | 1.8 years | 6 years |
| C/E | 44 days | 0.1 years | 13.1 years | 14 years |
| 2/E | 20 days | 3 years | 4 years | 13 years |
| 3/E | 20 days | 8 years | 11 years | 11.8 years |
| Bosun | 20 days | 9 years | 9 years | 13 years |
| Pumpman | 20 days | 10 years | 5 years | 12 years |

53. The Administrator did not find any indication that any crewmembers involved with this incident had failed to receive the amount of rest mandated by the IMO's Seafarers Training, Certification and Watchkeeping (STCW) Code, Section A-VIII/1, paragraphs 2 and 3 and the International Labour Organization's Maritime Labour Convention, 2006 (MLC, 2006), Regulation 2.3.

54. Alcohol testing conducted on all crewmembers after the incident did not detect the presence of alcohol. Additionally, drugs and alcohol were not detected during postmortem toxicology testing of the 3/E.

55. The 3/E was not involved in any maintenance of the deck steam system since joining NAVIG8 AXINITE. However, it is reported that he previously served on a similar ship and was familiar with the operation of the steam system. Additionally, it was reported that he was experienced in deck steam system maintenance and tank cleaning heaters.

# PART 3: ANALYSIS

The following Analysis is based on the above Findings of Fact.

***Tank Cleaning Heater Level Control Valve Failure***

While cleaning COT No. 3, port and starboard, the water temperature did not rise above 65°C. The plan called for 75°C. The C/O, C/E, 2/E, and 3/E all attempted to troubleshoot the system. While examining the tank cleaning heater, they found that TR109, which automatically controlled the condensate level in the tank cleaning heater, stopped working properly. This prevented the heater from raising the wash water temperature to the required 75°C.

The TR110 immediately downstream of the TR109, had been partially closed to increase the effectiveness of the heater and raise the wash water temperature *(see Figure 7)*. The wash water was at the required 75°C when cleaning COT Nos. 1 and 2, port and starboard. This indicates TR109 was functioning properly when tank cleaning started. The cause of TR109's failure could not be determined.

While the troubleshooting was underway, fuel changeover was planned as the ship was departing the North Sea ECA. The C/E decided that further heater troubleshooting would have to wait until after the changeover. The C/E, 2/E, and 3/E returned to the Engine Room to prepare for the changeover.

A short while later, the 3/E told the 2/E that he was going up to eat dinner and that he would conduct a short check on deck before returning to the Engine Room.

***Observation Tank Vent***

Following the incident, the vent for the observation tank was disassembled and inspected. It was found that the flame arresting screen which was supposed to be fitted at the vent discharge had been replaced with a metal blank with about a 5 mm hole in the center. This drastically reduced the venting capacity for the 25 mm pipe.

Before the incident, the Company's SMS had a detailed PMS which included requirements for the deck steam system. However, the observation tank vent and flame screen were not specifically addressed. Also, the functionality of TR101, TR109, and TR110 were not identified in the PMS. However, it is reported that these valves are operated during alignment and warm-up of the steam system. It was reported that they were all operational when tank cleaning started.

At the time of the incident, the Company had 13 similarly designed ships, all constructed at the same shipyard, under their management. Besides the NAVIG8 AXINITE, one other ship in their fleet had a similar blank fitted in the observation tank vent. The Administrator was unable to identify when or where these blanks were fitted on the observation tank vents of these two ships.

***Observation Tank Drain Line Valve***

It was also noted following the incident that TR101 on the observation tank drain line was found fully closed. This prevented condensate from flowing back to the Engine Room. The manufacturer's instruction manual states that this valve must remain open at all times when operating the steam system. At the time of the incident, no warning or other markers to this effect were present near the valve.

It could not be determined exactly when or why this valve was shut.

***Observation Tank Glass Failure***

About 17 minutes after the 3/E came up from the Engine Room, a loud bang was heard by crewmembers working at the port side cargo manifold. Large quantities of steam were seen coming from the vicinity of the Slop tanks. When the crewmembers went aft to investigate, they found that the sight glass on the observation tank had failed and steam was coming from this opening.

They also found the 3/E lying on the deck about 10 m to starboard of the observation tank. His portable VHF radio was found near the broken sight glass. This indicates that he might have been looking through the sight glass or standing near the tank when it failed. No information is available indicating what the 3/E might have done while on deck just prior to the failure of the glass.

It is likely that ineffective regulation of the condensate in the tank cleaning heater allowed excessive steam to pass into the condensate return line. This is shown by reports from the crewmembers that steam was seen coming from the observation tank vent during initial troubleshooting. However, the ability to vent the steam was severely restricted by the 5 mm hole in the metal blank fitted on the vent discharge. TR101 being closed caused pressure to increase at a rate greater than what could be relieved by the restricted vent opening. Eventually, the increasing pressure within the observation tank caused the sight glass to fail.

***3/E Injuries***

The 3/E was found to have numerous injuries to his head, upper body, and arms when examined by the crewmembers in the ship's Hospital. A postmortem examination concluded that his head, upper body, and arms had numerous lacerations consistent with being struck by glass. Although the incident was not witnessed, it is presumed that the 3/E was standing near or looking through the observation tank sight glass when it catastrophically failed.

***Deck Steam System Warm-Up***

During deck steam system warm-up, the forward bypass line was opened, allowing condensate from the steam line to drain to the condensate return line. A steam trap installed on this bypass line allows condensate to pass while preventing steam from escaping. Following the incident, the steam trap was tested by the ship's crew and reported to be functioning properly.

Small quantities of steam could potentially pass to the condensate return line through the steam trap. It is not believed that the failure to close the bypass line significantly contributed to steam in the condensate return line.

***Pre-Task Risk Assessment***

The Company's SMS requires completing a risk assessment and Toolbox Talk before tank cleaning operations. The C/O held a Toolbox Talk with the involved crewmembers before starting the work. He reviewed the Company's standing risk assessment for tank cleaning operations. The C/E was present for this briefing. However, the 3/E was not.

The standing risk assessment reviewed for this tank cleaning operation focused on the hazards associated with an unknown or potentially unsafe atmosphere within the tanks and the potential environmental damage that could result from the failure to properly remove residual cargo. However, this risk assessment did not identify any risk associated with the deck steam system or tank cleaning heater.

# PART 4: CONCLUSIONS

The following Conclusions are based on the above Findings of Fact and Analysis and shall in no way create a presumption of blame or apportion liability.

1. Causal factors that contributed to this very serious marine casualty include:
   (a) failure of TR109, which prevented the proper condensate level control in the tank cleaning heater, which likely allowed steam to pass into the condensate system;
   (b) the modification to the observation tank vent reduced the opening to about 5 mm, limiting its pressure release capability;
   (c) the TR101 being closed while the steam system was operating at 6 bar, which significantly increased the pressure in the observation tank;
   (d) catastrophic failure of the sight glass on the observation tank from over pressurization; and
   (e) lack of a warning sign or other marking near the TR101 to warn against closure while the steam system is operational.
2. Additional causal factors identified by the Administrator that may have contributed to this very serious marine casualty include:
   (a) use of a standing risk assessment that did not fully capture all of the risks that could reasonably be expected to be encountered;
   (b) lack of requirements in the Company's PMS specific to the flame arresting screen for the observation tank; and
   (c) failure to verify the proper deck steam system alignment when the bypass line valves were left open following warm-up.

# PART 5: PREVENTIVE ACTIONS

In response to this very serious marine casualty, the Company took the following Preventive Actions.

1. A safety alert was sent to all ships in the Company's managed fleet to require:
   (a) vents fitted on observation tanks be checked to ensure that no modifications have been made which would restrict them;
   (b) renewal of flame arresting screens fitted on observation tank vents;
   (c) locking arrangements to be fitted on observation tank outlet valves to prevent inadvertent closure; and
   (d) that the observation tank outlet valves be sealed and the seal number entered into the ship's seal log.

2. The Company's PMS was amended to include a quarterly inspection of the observation tank flame arresting screens.
3. The observation tank sight glasses on board ships in the Company's managed fleet were modified to include a metal cover to limit the unprotected glass area.
4. Additional training on tank cleaning heating systems was provided to crews on board ships in the Company's managed fleet.
5. The standing risk assessment for tank cleaning was updated to include control measures to prevent a similar incident.
6. The incident has been included as a case study to use during crew training seminars.

# PART 6: RECOMMENDATIONS

Based on the above Conclusions and in consideration of the Preventive Actions taken, the Administrator has no recommendations.

The Administrator's marine safety investigation is closed. It will be reopened if additional information is received that would warrant further review.